IEC 61850-9-2 establishes an operating standard on the SAS process bus and, according to the standard, the MUs must be synchronized in time to guarantee that the SV are processed properly in the IEDs. The sample counter (SmpCnt), whose value is incremented for each sample acquired and inserted in the SV frame, represents the exact moment that each sample was acquired. At each turn of the second, the SmpCnt is reseted.
The IED that receives the SV uses the SmpCnt to align the samples in time and thus reconstitute the waveform. All algorithms for phase angle verification are done through this mechanism. Figure 1 exemplify SmpCnt implementation algorithm.

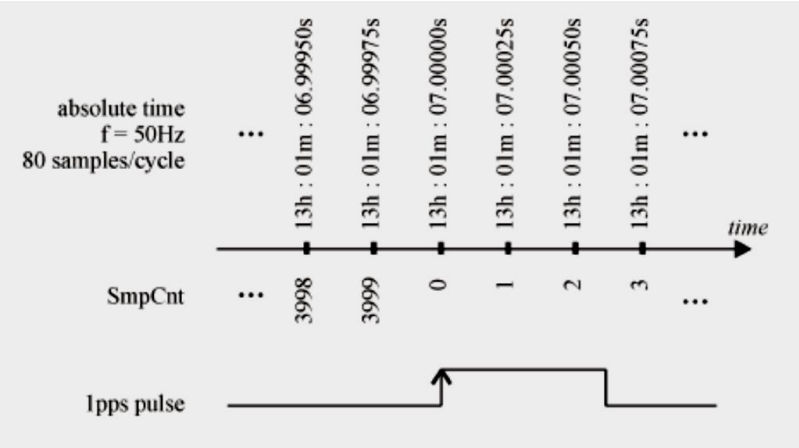

Figure 1 - SmpCnt Implementation Algorithm

Once the waveform is reconstituted and the phase angle is known, it is possible to verify if the sampling data between different IEDs are out of synchronization. A way to do that is using a test set to inject the same V and I analog signals on the MUs that will publish Sampled Values to the IEDs. Using the IEDs COMTRADE, the test set will verify if the same phases has the waveform aligned. If they do not be aligned it indicates that sync is lost. Figure 2 demonstrates the test scheme.

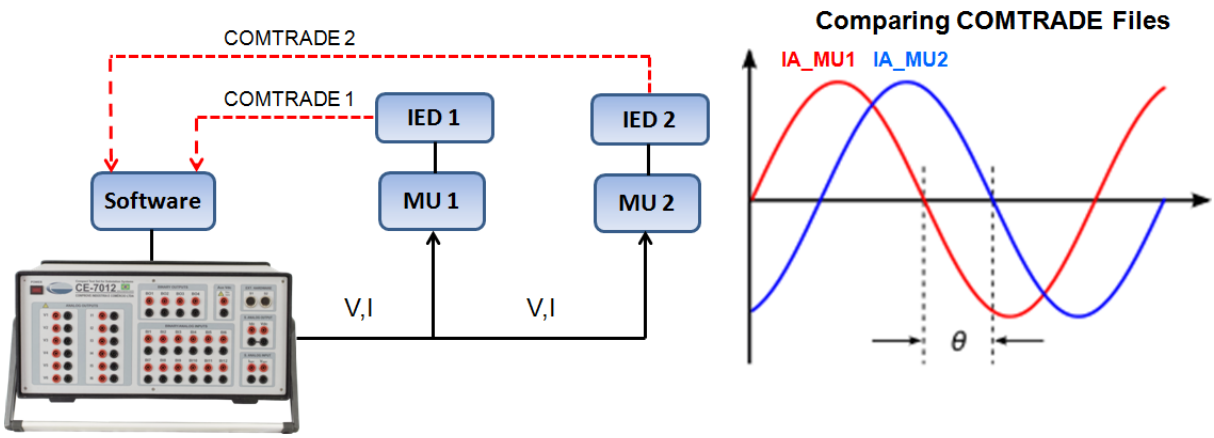

Figure 2 - Loss of Synchronization Verification

Considering that the same analog signals were injected on the MUs, the SmpCnts of the same phases have to be aligned if MUs are synchronized. In case of phase shift between the same

SmpCnts, IEDs must do a compensation using the phase angle value found on the COMTRADE analysis as calibration value. Therefore, IEDs must compensates the phase shift using it in the FFT calculation.
To do this compensation is better to use a higher sampling rate in order to optimize the data processing due to the smaller time difference between samples.